Rex's "Rita Revival" Service

Fitting Guide for LRR Circuit Board

The "Revival" unit is suitable for Triples, however not where three 4 volt HT coils are connected in series. See notes below for suitable HT coil configurations.

AB11 Units

1. Remove the back of your Rita unit. This is secured by 4 screws. Retain the gasket.
2. Unscrew the electronic circuit board, it is secured by 6 screws, these are a different size to the cover, do not mix them. If the board is connected to a round gold component connected to the case simply cut the tag off flush. The remaining part can be left where is is providing the tag isn't stopping the new board fitting in to the case.
3. Remove the grommet and keep it. This is re-used.
4. The fixing points inside the box are at two different heights. There are two ways to deal with this:
   A: Use the washers in the kit as spacers.
   B: Machine down the two higher fixing points.
5. If using the washers in the kit, place them as shown.

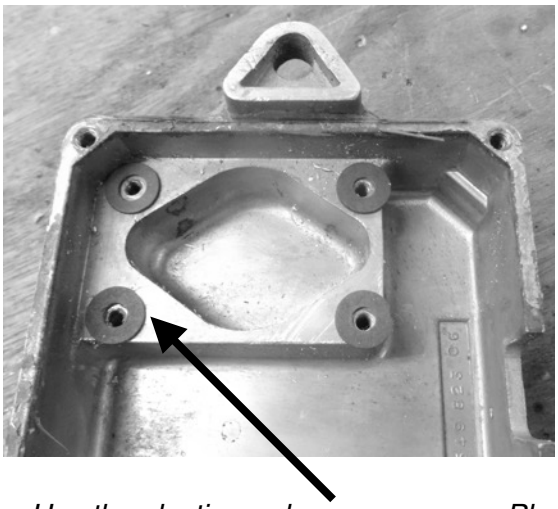

Use the plastic washers as spacers. Place in the position shown, you may need 2 at each position.

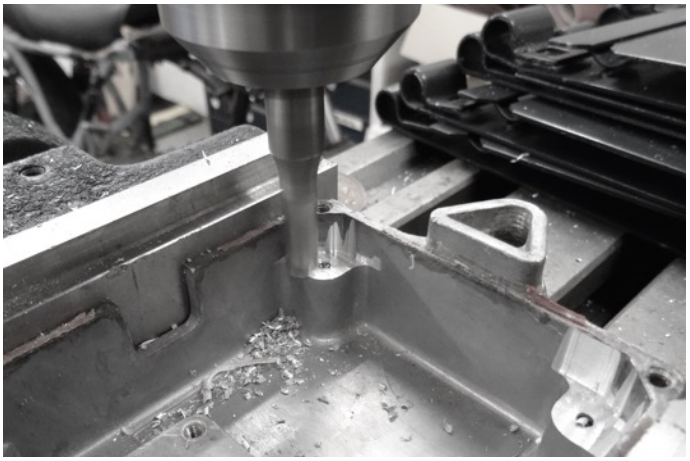

Alternate method, machining the higher mount position down. ***Caution: Allowing swarf to come in to contact with the electronics will invalidate vour warranty.***

Handle the new board as little as possible.

6. If you have machined the case disregard the washers. Thoroughly clean away all traces of swarf.
7. The "Revival" circuit board fits with the electronic components facing up. This is different to the original. Bolt in using the original screws.
8. Thread the leads through the grommet. Use a small dab of silicone sealant to ensure a good seal.
9. Refit the cover, reuse the gasket.
10. The wire colours are the same, match them to the originals.
11. We supply new connectors as the Lucas multi-pin housings are no longer manufactured.

Fit the board with the components face up as shown.

Don't forget the grommet.

Refit the back cover.

Connect the wires, terminals require proper tools to form them, pliers will not give the correct crimp. Running issues will occur with poor connections.

Re-check ignition timing.

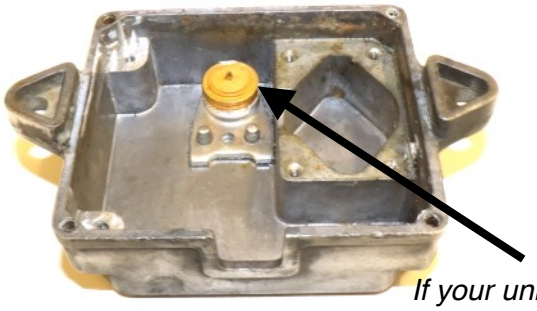

If your unit has a large diode in the case cut the wire off flush with the metal can

Rex's for AGM batteries - Genuine Lucas Parts - HT Coils - Rewinds - Wiring looms

AB5 Units

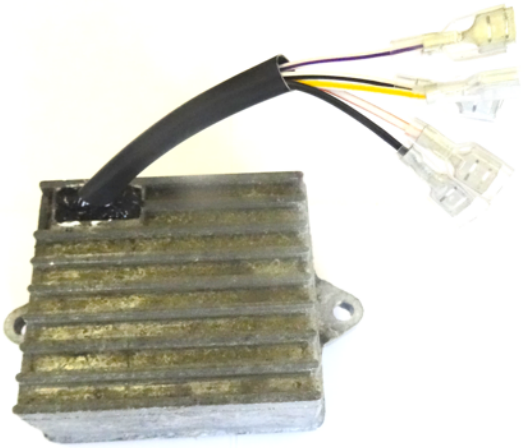

Rex's "revival" circuit will replace AB5 internals to give a brand new, better protected ignition that gives modern performance yet uses significantly less power than the old AB5 unit.

However the part number LRR-V1 was designed to fit the AB11 metal case. The solution is simply to mount the circuit board inside the box on to the metal lid of the AB5 case.

Main AB5 - AB11 Differences:
Wire colours are different on the AB5 unit but have the same function as those on the AB11.
The large resistor external is no longer needed as the "revival" circuit has a smaller, more efficient one on the electronic circuit board.

First open the unit by removing the metal back. Unscrew and discard the old circuit board, the external resistor and its wiring.

Be careful to save the gasket & grommet.

Handle the new board as little as possible!

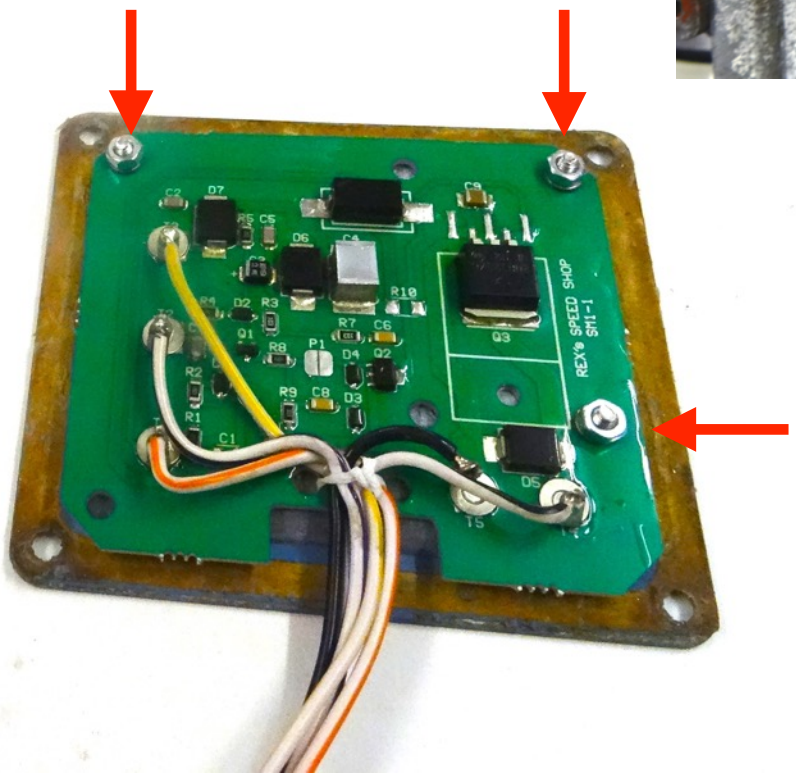

Caution: Allowing swarf to come in to contact with the electronics will invalidate your warranty.

Carefully offer up the board to the steel lid and mark three of the mounting holes as shown in the picture.

Drill holes with a 1/8th or 3.2 mm drill. Great care is needed as the holes will fall exactly in the pressed corners of the lid.

Use the M3 nuts and bolts to secure the board to the lid

Feed the cables through the grommet and refit the lid to the case.

See the wiring diagram below for connection information.

Connect the wires, terminals require proper tools to form them, pliers will not give the correct crimp. Running issues will occur with poor connections.

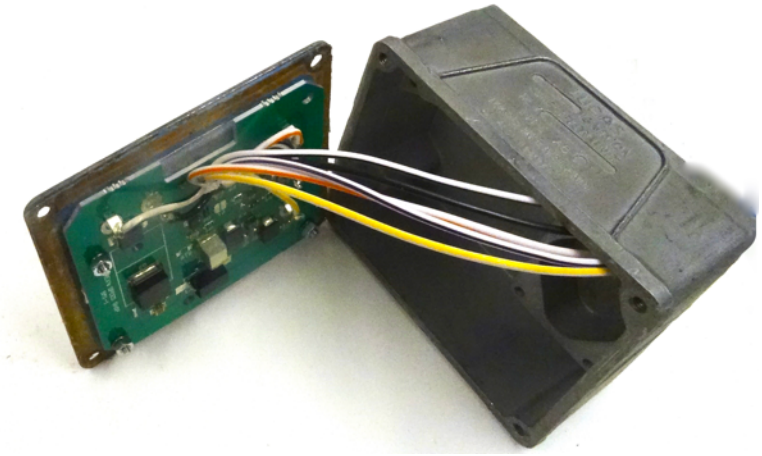

Re-check ignition timing.

AB5 to AB11 wire colours

AB5 Wire colours	AB11 & revival circuit colours
White/Brown	White/Purple
Brown	White/Orange
Black	Black
White/Black	White/Black
Red/Black	White/yellow

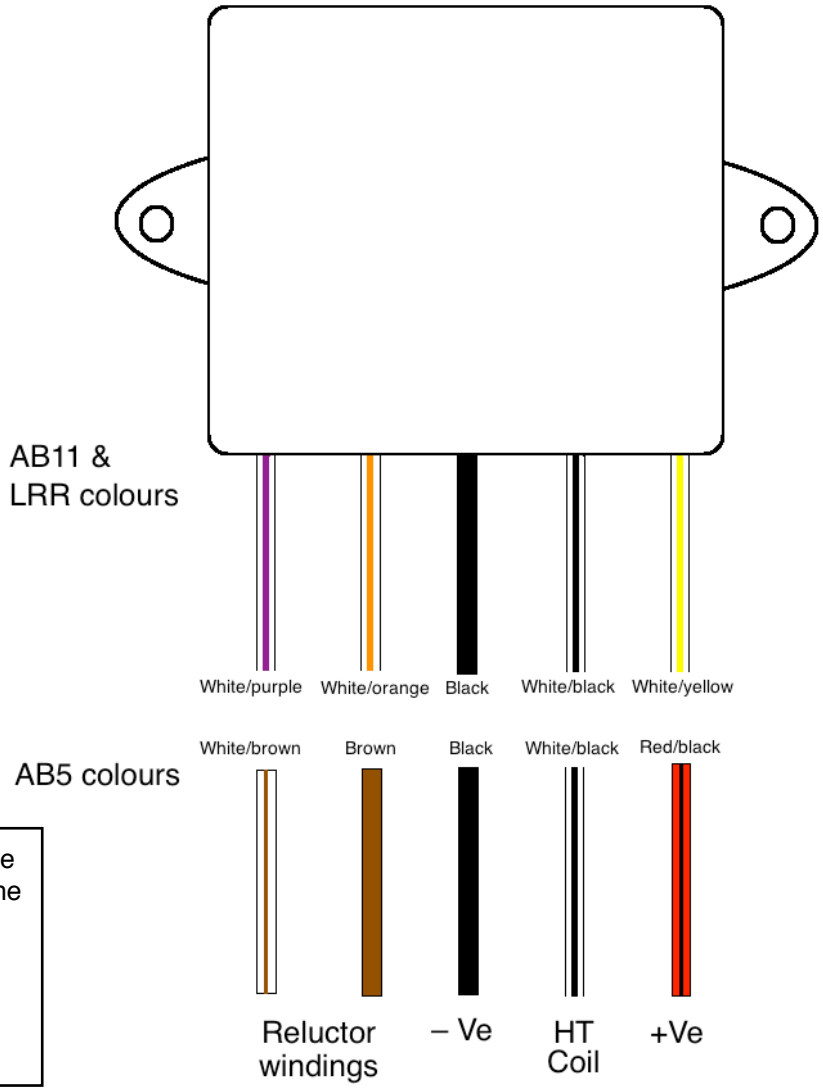

On NEGATIVE earth machines +Ve is supplied by the wiring from the ignition switch. The black wire from the ignition unit is connected to -Ve (frame).

On POSITIVE earth machines the +Ve would be the frame. The black wire from the ignition unit is connected to the wiring from the ignition switch

The recommended HT coil configurations for our “LRR” and all Lucas Rita systems are shown below, they represent the most reliable and simplest methods of connecting single or multiple coils. While other configurations were used in the past, the wiring could be more complex and need extra components. Using three, 4 volt coils on Triples must be avoided completely, this configuration was quickly dropped due to excessive back voltage it causes.

Coil Configurations <u>Without</u> Diode Pack

Single HT coil configuration, applies to either a single lead HT coil or twin lead HT coils.

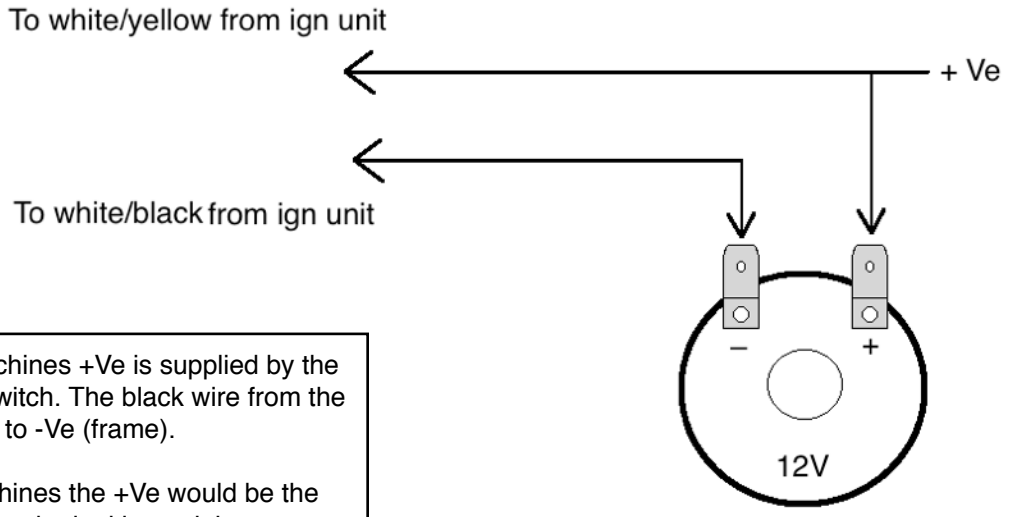

On NEGATIVE earth machines +Ve is supplied by the wiring from the ignition switch. The black wire from the ignition unit is connected to -Ve (frame).

On POSITIVE earth machines the +Ve would be the frame. The black wire from the ignition unit is connected to the wiring from the ignition switch

6 Volt Coils.
British parallel twins commonly used two 6 volt coils connected in series and a single set of contact breakers to give sparks to both cylinders. The Rita ignition unit and our LRR circuit can also use a pair of 6 volt coils connected in series. This configuration can also be used on the Yamaha XS650 with its original 360 degree crank shaft. The only advantage is that no diode pack is needed.

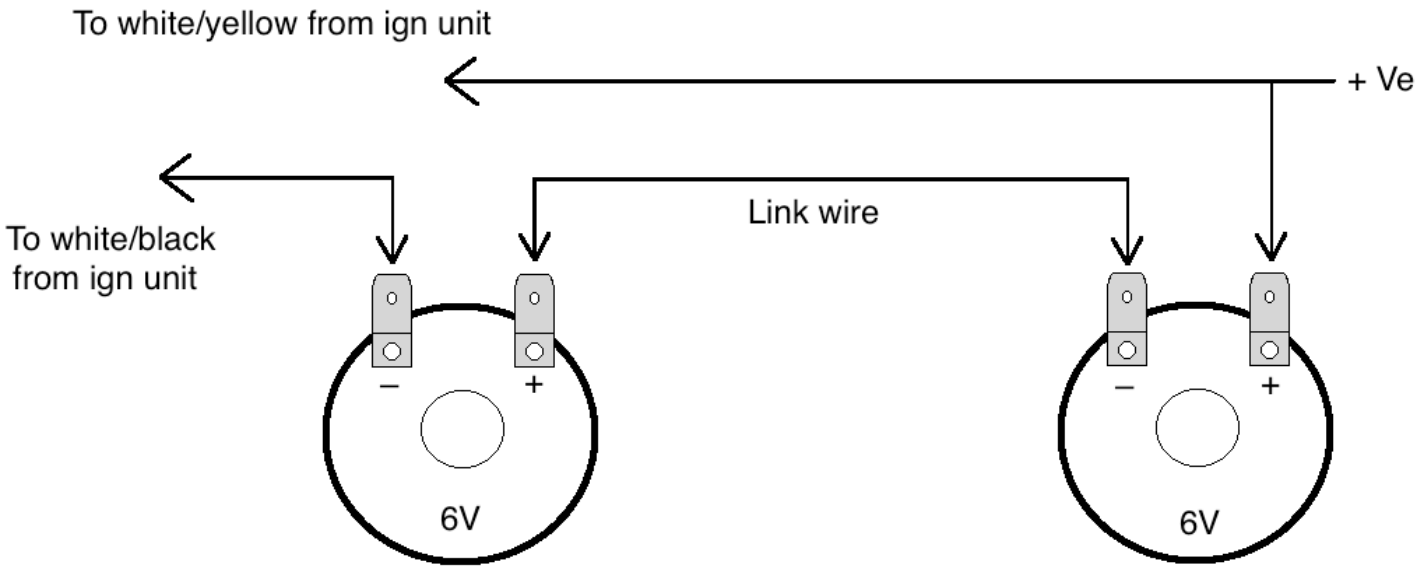

Coil Configurations With A Diode Pack

A diode pack is usually used with 'V' twins and parallel twins equipped with two individual HT coils. The use of 6 volt coils on 12 volt systems caused confusion for owners, so a diode pack was adopted to allow the coil's voltage to be the same as that of the machine's charging system.

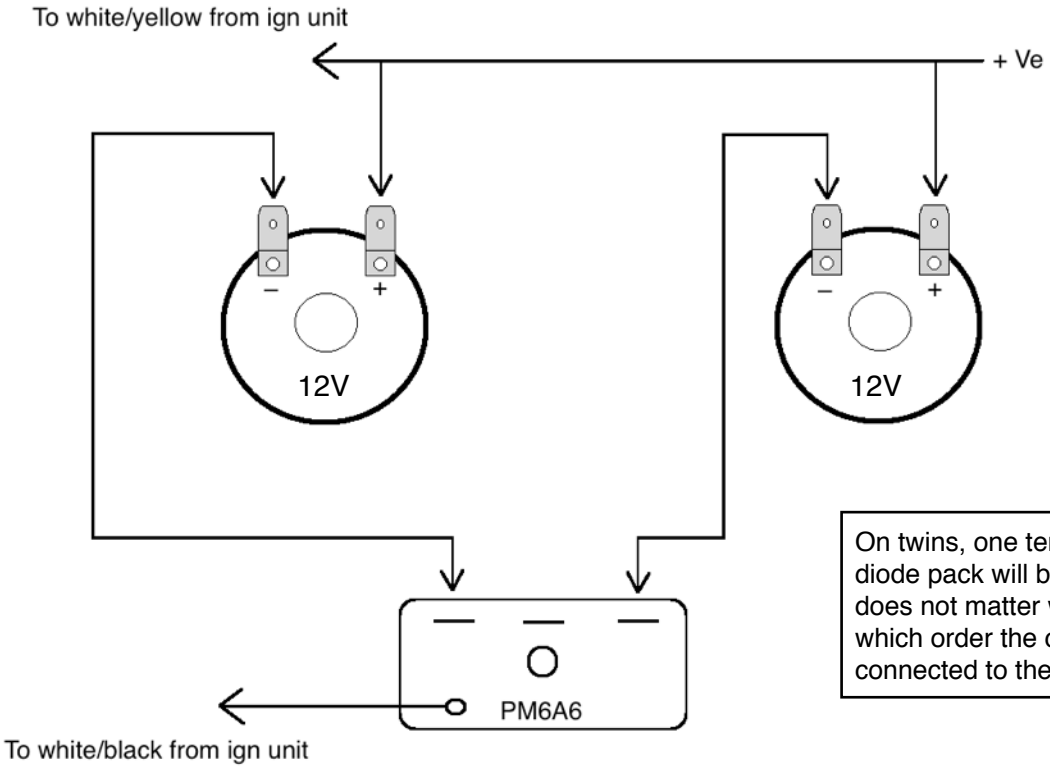

On twins, one terminal of the diode pack will be left unused. It does not matter which one nor which order the coils are connected to the diode pack.

3 Cylinder Machines

The use of 4 volt coils connected in series causes excessive back voltage inside the ignition unit and is not recommended. Our LRR circuit is designed to shutdown to protect itself from excessive back voltage from the HT coils. Original units did not have this feature, so would continue to run even though the back voltage was dangerously high (350-450v). Lucas dropped the use of 4 volt coils in favour of a diode pack which reduces back voltage and avoids stress on the ignition unit.

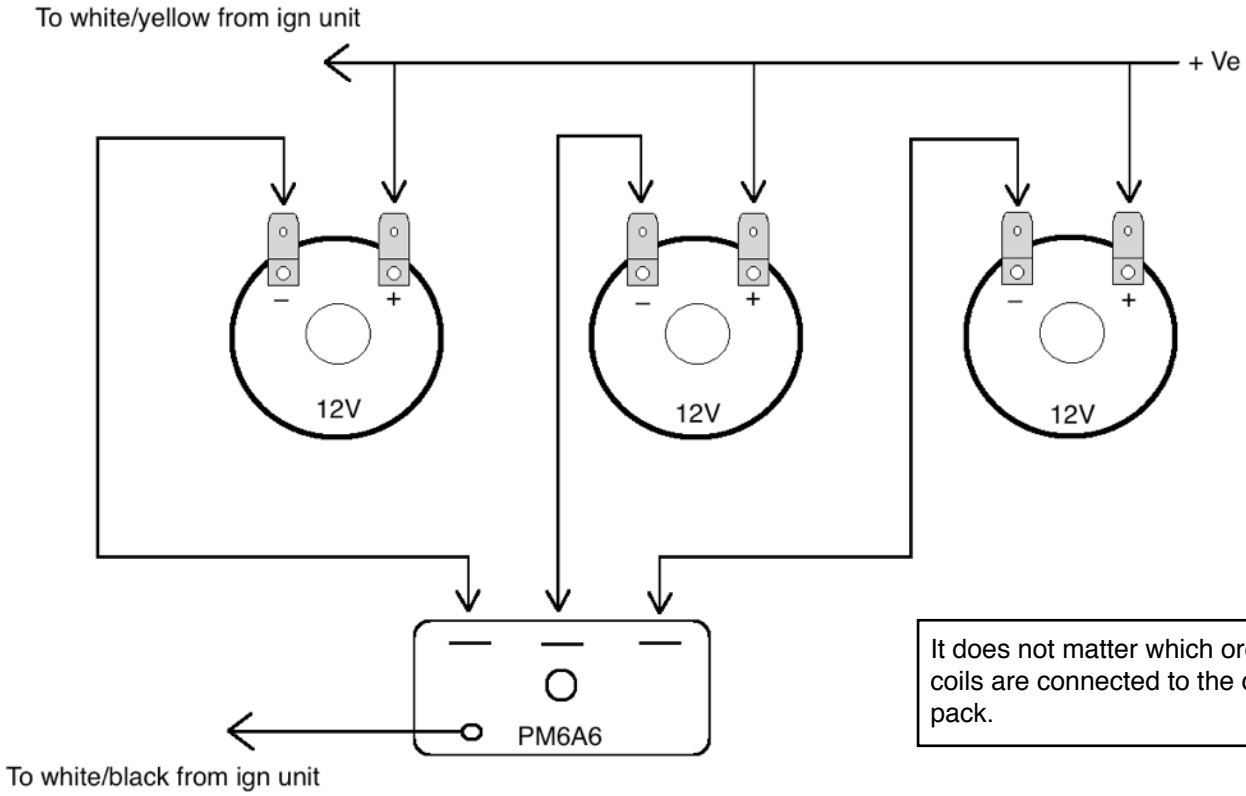

It does not matter which order the coils are connected to the diode pack.